SITE SAFETY LOGISTICS PLAN

FOR

NEW 43 STORY RESIDENTIAL BLDG
AT
45 PARK PLACE
NEW YORK, NY 10007

B.E.S.T. SQUAD FILING SET
DATE: JULY 05, 2018

DRAWING LIST:

SSP-000.09	COVER SHEET	
SSP-001.09	GENERAL INFORMATION AND TYPICAL SAFETY NOTES	
SSP-002.01	TYPICAL SAFETY DETAILS A	ALREADY APPROVED ON 11/23/16
SSP-003.01	TYPICAL SAFETY DETAILS B	
SSP-004.01	TYPICAL SAFETY DETAILS C	APPROVED ON 4/4/17
SSP-005.02	TYPICAL SAFETY DETAILS D	
SSP-100.04	EXCAVATION PHASE SITE SAFETY PLAN	APPROVED ON 4/4/17
SSP-101.04	FOUNDATION PHASE SITE SAFETY PLAN	
SSP-101A.01	TOWER CRANE ERECTION PHASE (FOUNDATION SHOWN) SITE SAFETY PLAN	
SSP-102.01	SUPERSTRUCTURE PHASE BELOW 75' UP TO GROUND FL SITE SAFETY PLAN	
SSP-102A.01	SUPERSTRUCTURE PHASE BELOW 75' UP TO 4TH FL SITE SAFETY PLAN	
SSP-103.00	SUPERSTRUCTURE PHASE BELOW 75' (4TH FL SHOWN) CAZ COORDINATION WORK WITH 53 PARK PLACE SSP	APPROVED ON 10/26/17
SSP-104.02	SUPERSTRUCTURE PHASE ABOVE 75'OPTION 1 (MAIN ROOF SHOWN) SITE SAFETY PLAN	APPROVED ON 4/27/18
SSP-105.02	SUPERSTRUCTURE PHASE ABOVE 75'OPTION 2 (MAIN ROOF SHOWN) SITE SAFETY PLAN	
SSP-106.00	FACADE INSTALLATION CURTAIN WALL PHASE (MAIN ROOF SHOWN) SITE SAFETY PLAN	APPROVED ON 4/26/18
SSP-120.01	TOWER CRANE JUMP PHASE OPTION 1 (MAIN ROOF SHOWN) SITE SAFETY PLAN	APPROVED ON 4/27/18
SSP-121.01	TOWER CRANE JUMP PHASE OPTION 2 (MAIN ROOF SHOWN) SITE SAFETY PLAN	
SSP-200.01	COCOON LOCATION & HORIZONTAL NETTING PLAN (MAIN ROOF SHOWN)	APPROVED ON 4/26/18
SSP-300.02	SOUTH & WEST FACADE ELEVATIONS (SUPERSTRUCTURE PHASE)	
SSP-301.02	NORTH & EAST FACADE ELEVATIONS (SUPERSTRUCTURE PHASE)	
SSP-302.00	SOUTH & WEST FACADE ELEVATIONS (FACADE INSTALLATION PHASE)	APPROVED ON 1/09/18
SSP-303.00	NORTH & EAST FACADE ELEVATIONS (FACADE INSTALLATION PHASE)	

NEW BUILDING

ADDRESS: 45 PARK PLACE NY NY
BLOCK: 126
LOT: 9
BIN# : 1079148
COMMUNITY BOARD:101
ZONING DISTRICT: C6-4
MAP: 12B
HEIGHT: 43 STORIES @ 643'-0"
BLDG USE: RESIDENTIAL
JOB #: 121185635

PLAN PREPARED BY:
CR SAFETY construction & realty safety group
226 EAST MERRICK ROAD
VALLEY STREAM, NY 11580
(516) 256-0317

OWNER
PARK PLACE PARTNERS DEVELOPMENT C/O SOHO PROPERTIES
31 WEST 27 STREET
MANHATTAN NY 10001
212-966-9600

CONSTRUCTION MANAGER
GILBANE RESIDENTIAL CONSTRUCTION, LLC
88 PINE STREET 27TH FLOOR
NEW YORK, NY 10005
212-312-1600

John Young, RA
APPROVED
AMENDED PLAN
07/06/2018
BEST SSP

45 Park Place

Site Safety Plan

New 43 Story Residential Building

OWNER INFO

NAME: **PARK PLACE PARTNERS DEVELOPMENT**
C/O SOHO PROPERTIES
ADDRESS: 31 WEST 27 STREET
MANHATTAN NY 10001
PHONE: 212-966-9600

CONTRACTOR INFO

NAME: **GILBANE RESIDENTIAL CONSTRUCTION, LLC**
ADDRESS: 88 PINE STREET 27TH FLOOR
NEW YORK, NY 10005
PHONE: 212-312-1600
TRACKING #: 036789

SITE SAFETY MANAGER

NAME: **ROBERT ROMANO**
COMPANY: GILBANE RESIDENTIAL CONSTRUCTION, LLC
ADDRESS: 88 PINE STREET 27TH FLOOR
NEW YORK, NY 10008
PHONE: 212-896-1066
LICENSE #: 2346

CONCRETE SAFETY MANAGER

NAME: **NATHANIEL LEE**
COMPANY: MANHATTAN CONCRETE LLC
ADDRESS: 511 CANAL ST, 4TH FL
NEW YORK, NY 10013
PHONE: 917-710-7364
LICENSE #: 2394

1

CONSTRUCTION FIRE SAFETY MANAGER

NAME: **EUGENE YULCHEVSKY**
COMPANY: GILBANE RESIDENTIAL CONSTRUCTION, LLC
ADDRESS: 88 PINE STREET 27TH FLOOR
NEW YORK, NY 10005
PHONE: 347-325-0033
LICENSE #: 88391677

AERIAL MAP

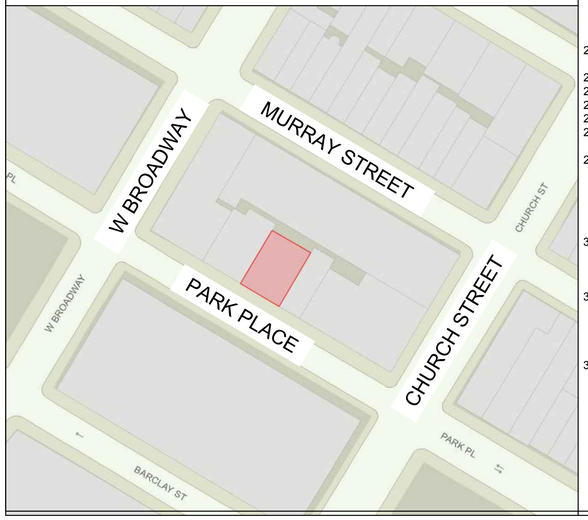

EMERGENCY PHONE NUMBERS

BUILDING ENFORCEMENT SAFETY TEAM (B.E.S.T.)	(212) 602-0406
DEPT OF TRANSPORTATION	(212) 639-9675
EMERGENCY	911
NYC DEPT OF BUILDING - MANHATTAN	(212) 566-0019
FDNY - MANHATTAN	(212) 570-4300

LOCAL POLICE PRECINCT:
1ST PRECINCT
16 ERICSSON PLACE
(212) 334-0611

LOCAL EMS STATION:
LOWER EAST SIDE
DIVISION 1
S ST && CLINTON ST
(212) 964-6217

FDNY:
BATTALION 1 ENGINE 7 LADDER 1
100DUANE STREET
NEW YORK, NY10007

DRAWING LIST

LEGEND:
X- REVISED SHEET
O- NEW ADDITION SHEET

	27 MAY 15	7 JAN 16	27 JUNE16	8 NOV. 16	FILING SET 28 FEB. 17	FILING SET 14 SEPT. 17	FILING SET 3 JAN.,2018	FILING SET 26 APR.,2018	FILING SET 27 APR.,2018	FILING SET 09 JULY,2018
SSP-000.09 _ COVER SHEET	X	X	X	X	X	X	X	X	X	X
SSP-001.09 _ GENERAL NOTES & INFORMATION	X	X	X	X	X	X	X	X	X	X
SSP-002.01 _ TYPICAL SAFETY DETAILS A	X			X						
SSP-003.01 _ TYPICAL SAFETY DETAILS B	X			X						
SSP-004.01 _ TYPICAL SAFETY DETAILS C				O	X					
SSP-005.02 _ TYPICAL SAFETY DETAILS D						O		X		X
SSP-100.04 _ EXCAVATION PHASE SITE SAFETY PLAN	X	X	X	X	X					
SSP-101.04 _ FOUNDATION PHASE SITE SAFETY PLAN	X	X	X	X	X					
SSP-101A.01 _ TOWER CRANE ERECTION PHASE				O	X					
SSP-102.01 _ SUPERSTRUCTURE PHASE BELOW 75' UP TO GROUND FL				O	X					
SSP-102A.01 _ SUPERSTRUCTURE PHASE BELOW 75' UP TO 4TH FL				O	X					
SSP-103.00 _ SUPERSTRUCTURE PHASE BELOW 75' (4TH FL SHOWN) CAZ COORDINATION WORK WITH 53 PARK PLACE						O				
SSP-104.02 _ SUPERSTRUCTURE PHASE ABOVE 75' OPTION 1 (MAIN ROOF SHOWN)							O	X	X	
SSP-105.02 _ SUPERSTRUCTURE PHASE ABOVE 75' OPTION 2 (MAIN ROOF SHOWN)							O	X	X	
SSP-106.00 _ FACADE INSTALLATION CURTAIN WALL PHASE (MAIN ROOF SHOWN)							O			
SSP-120.01 _ TOWER CRANE JUMP PHASE OPTION 1(MAIN ROOF SHOWN) SSP								O	X	
SSP-121.01 _ TOWER CRANE JUMP PHASE OPTION 2(MAIN ROOF SHOWN) SSP								O	X	
SSP-200.01 _ COCOON LOCATION & HOR. NETTING PLAN (MAIN ROOF SHOWN)							O	X		
SSP-300.01 _ SOUTH & WEST FACADE ELEVATIONS (SS PHASE)				O			X	X		
SSP-301.01 _ NORTH & EAST FACADE ELEVATIONS (SS PHASE)				O			X	X		
SSP-302.00 _ SOUTH & WEST FACADE ELEVATIONS (FACADE INSTALLATION PHASE)							O			
SSP-303.00 _ NORTH & EAST FACADE ELEVATIONS (FACADE INSTALLATION PHASE)							O			

GENERAL SITE SAFETY NOTES

1. THE WORK WILL COMPLY WITH ALL APPLICABLE SECTIONS OF CHAPTER 33 OF THE NYC BUILDING CODE AND ALL OSHA 1926 STANDARDS FOR CONSTRUCTION.
2. SIGNED STATEMENT INDICATION FAMILIARITY WITH THE SAFETY REQUIREMENTS OF CHAPTER 33 OF TITLE C OF THE NYC BUILDING CODE AND STATING THAT SUCH REQUIREMENTS WILL BE MET SHALL BE FILED WITH THE BUILDING DEPT.
3. WHEN A BUILDING DEPT INSPECTOR VISITS A JOB SITE OF A MAJOR BUILDING, HE MAY CONSULT WITH THE SITE SAFETY MANAGER TO MAKE CERTAIN THAT THE REQUIREMENTS AND THE SITE SAFETY PROGRAM ARE BEING COMPLIED WITH.
4. VERTICAL AND HORIZONTAL SAFETY NETTING WILL COMPLY WITH CHAPTER 33.
5. PERMITS FOR SIDEWALK SHEDS SHALL BE OBTAINED AS REQUIRED IN CHAPTER 33 OF THE NYC BUILDING CODE.
6. SIDEWALK SHED AND PROTECTION FOR ALL PUBLIC/PEDESTRIANS SHALL COMPLY WITH ALL REQUIREMENTS OF CHAPTER 33 OF NYC BUILDING CODE (NYC BC 3307.3.1(2;4), 3307.3.2, 3307.6.2) AND D.O.T. REQUIREMENTS. SIDEWALK SHEDS SHALL BE DESIGNED BY LICENSED PROFESSIONALS AS REQUIRED IN CHAPTER 33 AND PER D.O.T. (THESE DRAWINGS SHALL BE AT THE SITE AS REQUIRED IN CHAPTER 33).
7. OBTAIN ALL REQUIRED PERMITS FOR DEPT OF TRANSPORTATION FOR ANY STREET OBSTRUCTIONS OR CLOSING.
8. MAN LIFT SHALL ACT AS EMERGENCY ELEVATOR, AS REQUIRED IN CHAPTER 33 WHEN SUPERSTRUCTURE IS BEING ERECTED.
9. ALL ASPECTS OF CHAPTER 33 OF THE NYC BUILDING CODE FOR OPERATION ONSITE INSPECTIONS FOR ALL CRANES, DERRICKS OR CABLEWAYS SHALL BE MET.
10. COMMUNICATION AMONG ALL RESPONSIBLE PARTIES WHEN CRANE AND DERRICK LOADS ARE CARRIED BEYOND THE PERIMETER OF THE BUILDING.
11. DURING ALL LIFTING & HOISTING OPERATIONS FLAGMEN WILL BE PROVIDED TO CONTROL ALL PEDESTRIAN AND/OR VEHICULAR TRAFFIC, AS APPROPRIATE.
12. STANDPIPE SYSTEM MEETING REQUIREMENTS OF CHAPTER 33 TO BE PROVIDED WHEN WORK REACHES A HEIGHT OF 75 FEET OR GREATER.
13. AN AMENDED PLAN TO BE SUBMITTED AND APPROVED FOR ANY CHANGES OR DEVIATIONS FROM THIS APPROVED PLAN.
14. REQUIRED SIGNAGE SHALL BE POSTED ACCORDING TO NYC BUILDING CODE, WITH SIGNS POSTED ON EACH SIDE OF THE PROPERTY THAT FACES A STREET. SIGNS POSTED ON CORNERS DO NOT COUNT AS SUBSTITUTIONS TO THIS RULE.
15. SIGNS SHALL BE NO MORE THAN 25 SQ FEET IN TOTAL AREA.
16. A HOT LINE NUMBER SHALL BE PROVIDED AT THE SITE FOR TELEPHONING THE DEPT OF BUILDINGS AND THE DEPT OF TRAFFIC WHEN IT IS NECESSARY TO CLOSE OF A STREET FOR SAFETY PURPOSES. THIS INFORMATION TO BE DISPLAYED ON SIGN REQUIRED UNDER CHAPTER 33.
17. A LIST OF ALL EMERGENCY TELEPHONE NUMBERS WILL BE POSTED IN THE CONSTRUCTION MANAGER'S OFFICE AT THE JOB SITE.
18. A LOG SHALL BE KEPT AT THE SITE OF ACTIVITIES TO COMPLY WITH THOSE RULES AND REGULATIONS TO BE AVAILABLE FOR INSPECTION AT ANY TIME DURING THE COURSE OF CONSTRUCTION AND FOR ONE YEAR THEREAFTER.
19. PROVISION FOR CONTINUOUS INSPECTION TO ENSURE SITE SAFETY WILL BE COORDINATED.
20. IN THE EVENT OF EMERGENCY A HORN WILL SOUND (2) TWO TIMES TO SIGNAL EVACUATION, AND THEN THE HORN WILL SOUND (1) TIME TO INDICATE ALL PERSONS ARE CLEARED FROM SITE. ALL PERSONNEL WILL BE DIRECTED TO EXIT TO THE 1ST FLOOR AND TO THE SIDE STREET SIDEWALKS AS PER POSTED SIGNS.
21. ALL PERSONNEL STARTING WORK ON THIS PROJECT WILL BE INFORMED OF THE ABOVE-MENTIONED EVACUATION PROCEDURE.
22. PRIOR TO PERFORMING ANY WORK ON THE PROJECT ALL WORKERS SHALL HAVE SUCCESSFULLY COMPLETED, WITHIN THE PREVIOUS 5 CALENDAR YEARS, A 10-HOUR COURSE APPROVED BY THE UNITED STATES DEPARTMENT OF LABOR OCCUPATIONAL SAFETY AND HEALTH ADMINISTRATION IN CONSTRUCTION INDUSTRY SAFETY AND HEALTH, OR BY THE COMMISSIONER COVERING SUBSTANTIALLY THE SAME MATERIAL. SUCCESSFUL COMPLETION OF SUCH TRAINING COURSE SHALL BE EVIDENCED BY (A) PRESENTATION OF A BONA FIDE COURSE COMPLETION CARD, (B) COPY OF SUCH CARD, (C) A TRAINING ROSTER, ATTENDANCE RECORD OR OTHER DOCUMENTATION FROM THE CERTIFIED TRAINER PENDING THE ISSUANCE OF SUCH CARD, OR (D) OTHER VALID PROOF WHICH MAY BE APPROVED BY THE COMMISSIONER. SUCH EVIDENCE SHALL BE READILY AVAILABLE TO THE COMMISSIONER UPON REQUEST.
23. ALL WORKERS EMPLOYED ON THE SITE SHALL RECEIVE A SITE-SPECIFIC SAFETY ORIENTATION PROGRAM. THIS PROGRAM SHALL INCLUDE A REVIEW OF ANY HAZARDOUS ACTIVITIES OF THE JOB THAT ARE RELEVANT TO THE TASKS AND ACTIVITIES TO BE PERFORMED. ALL WORKERS MUST ATTEND SUCH A PROGRAM NO LATER THAN 7 DAYS AFTER COMMENCING THEIR EMPLOYMENT.
24. ALL D.O.T. BARRIERS ARE TO BE CONTINUOUS.
25. ANY TIME AN AREA IS USED FOR STAGING OR MATERIAL STORAGE OVERHEAD PROTECTION OR CONTROLLED ACCESS WITH SOLID CONSTRUCTION AND LOCKED GATE MUST BE PROVIDED.
26. ALL ELEVATIONS ARE BASED UPON BOROUGH OF MANHATTAN DATUM, WHICH IS UNDERSTOOD TO BE 2.725' ABOVE MEAN SEA LEVEL AT SANDY HOOK (NGVD 1929).
27. ALL RAMPS TO ADHERE TO ALL REQUIREMENTS OF NYC BC 3315.
28. <u>INCIDENT NOTIFICATION</u> AS PER 3310.2(7) OF THE NEW YORK CITY BUILDING CODE, SITE SAFETY COORDINATORS AND MANAGERS MUST IMMEDIATELY REPORT INCIDENTS TO THE BUILDING DEPARTMENT. A CALL MUST BE MADE TO THE CALL CENTER 212-393-2128.
29. <u>INSTRUCTION TO REQUEST START OF WORK</u> :
    - 29.a. FOR DEMOLITION ONLY - A CALL TO CALL CENTER, (212) 227-4416, 24 HOURS BEFORE START OF WORK.
    - 29.b. FOR EXCAVATION ONLY- A CALL TO CALL CENTER, (212) 227-4416, 24 HOURS BEFORE START OF WORK. THEN SEND THE BEST SQUAD THEIR 24 HOURS NOTIFICATION.
    - 29.c. FOR ALL SUSPENDED SCAFFOLDING-NOTIFICATION MUST BE CALLED IN TO THE CALL CENTER 24 HOURS BEFORE START OF WORK AND AT TIME OF REMOVAL. THE NUMBER IS (212)393-2550
    - 29.d. FOR ALL OTHER SITE SAFETY JOBS - 24 HOURS BEFORE WORK STARTS OF WORK, ON COMPANY LETTER HEAD OR E-MAIL (BEST@BUILDINGS.NYC.GOV), SEND A LETTER OF NOTIFICATION TO THE BEST SQUAD AND COPY OF PW2. (TO THE ATTENTION OF BEST CHIEF).
30. <u>CLOSE OUT INSTRUCTIONS:</u>
    - 30.a. PARTIAL REMOVING SIDEWALK SHEDS REQUIRES AN AMENDED PLAN, NOTIFICATION TO THE BEST SQUAD AND AN INSPECTION BY THE BEST SQUAD.
    - 30.b. PERMANENTLY REMOVING SIDEWALK SHEDS REQUIRES NOTIFICATION TO THE BEST SQUAD AND AN INSPECTION BY THE BEST SQUAD.
    - 30.c. REMOVAL OF SITE SAFETY REQUIRES NOTIFICATION TO THE BEST SQUAD AND AN INSPECTION BY THE BEST SQUAD.
31. <u>TEMP GENERATORS USED FOR HOIST</u>: IF AT ANY TIME, THE GENERATOR FAILS TO OPERATE, THE FOLLOWING ACTIONS MUST BE TAKEN:
    - 31.a. NO WORK ALLOWED ABOVE 75'-0".
    - 31.b. THE SITE SAFETY MANAGER/SITE SAFETY COORDINATOR MUST CALL THE FDNY DISPATCH - BROOKLYN (718) 965-8300
    - 31.c. THE SITE SAFETY MANAGER/SITE SAFETY COORDINATOR MUST LOG THE FOLLOWING IN THE LOG BOOK - TIME OF OCCURRENCE, ESTIMATED DURATION THE HOIST WILL BE INOPERABLE, THE TIME FDNY & EOC WERE CALLED AS WELL AS THE PERSON WHO MADE THE CALL.
32. THE FOLLOWING INFORMATION WILL BE NOTED ON THE SITE SAFETY PLAN:
    - 32.a. IF APPLICABLE LIST THE CONTACT INFORMATION FOR THE HOIST OPERATOR, OPERATING ENGINEER & ELECTRICAL COMPANY WHO WILL BE MAINTAINING THE HOIST & GENERATOR. REQUIRED AT TIME OF HOIST IMPLEMENTATION NOT AT FIRST SUBMITTAL.
    - 32.b. LOCATION OF THE GENERATOR & FUEL
    - 32.c. MANUFACTURE SPECS ON TYPE OF GENERATOR
    - 32.d. HOIST OPERATOR & OPERATING ENGINEER REQUIRED TO OPERATE GENERATOR MUST BE IN CONTACT TO ENSURE SAFE OPERATION AND FUEL LEVEL ETC.
    - 32.e. A LIST OF THE REQUIRED PERMITS
    - 32.f. IF THE FUEL TANK IS NOT DIRECTLY ATTACHED TO THE GENERATOR AND HOSES ARE USED TO TRANSFER FUEL, A DOB FUEL STORAGE PERMIT IS REQUIRED. IF THE FUEL TANK IS DIRECTLY CONNECTED TO THE UNIT NO DOB PERMIT IS REQUIRED FOR FUEL STORAGE.
    - 32.g. TEMPORARY ELECTRICAL PERMIT

REVISIONS

1 CSM INFORMATION REVISED

APPLICATIONS & CONSIDERATIONS

JOB # 121185635 - NEW BUILDING
EQ - CONSTRUCTION EQUIPMENT
NB - NEW BUILDING
OT - GENERAL CONSTRUCTION
OT - STRUCTURAL
MH - MECH/HVAC
PL - PLUMBING
OT - FOUNDATION

JOB # 140222266- A3
EQ - PIPE SCAFFOLD

JOB # 140222293 - A3
EQ - SIDEWALK SHED

JOB # 140254052- A3
OT - BPP

MEC # FROM DOT (MEC-15-378).

OWNER

PARK PLACE PARTNERS DEVELOPMENT
C/O SOHO PROPERTIES
31 WEST 27 STREET
MANHATTAN NY 10001
212-966-9600

ENGINEER / DESIGNER

CR SAFETY construction & realty safety group
226 East Merrick Road
Valley Stream, NY 11580
(516) 256-0317

CONSTRUCTION MANAGER

GILBANE RESIDENTIAL CONSTRUCTION, LLC
88 PINE STREET 27TH FLOOR
NEW YORK, NY 10005
212-312-1600

REVISIONS

#:	DATE:	REVISION:
	10/30/13	ORIGINAL DRAFT
	1/7/16	REVISED
	6/27/16	REVISED
	11/8/16	REVISED
	2/28/17	BEST REVISION
	9/14/17	BEST REVISION
	1/03/18	BEST REVISION
	4/26/18	BEST REVISION
	4/27/18	BEST REVISION
	5/02/18	BEST REVISION

LOCATION INFO

D.O.B. Address: 45 Park Place
New York, NY 10007
Block: 126
Lot: 9
Zoning District: C6-4
Map: 12B
BIN #: 1079148

North

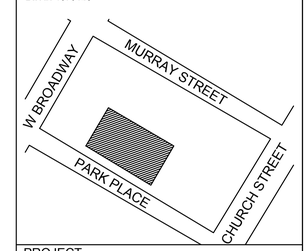

PROJECT

NEW 43 STORY RESIDENTIAL BLDG.
45 PARK PLACE
NEW YORK, NY 10007

DRAWING NAME

GENERAL INFORMATION & SAFETY NOTES

SEAL

John Young, RA
APPROVED
AMENDED PLAN
07/06/2018
BEST SSP

DATE:	JULY 05,2018
REVIEWED BY:	WA
DRAWN BY:	CJL/JH/ML/MN
SCALE:	N/A
DWG NUMBER:	SSP-001.09
CADD FILE NO:	45 Park Pl - SITE SAFETY - Draft 10-30-13.dwg

© CRSG 2014
It is a violation of the law to alter this document in hard copy or electronic format (the "document") in any way. Use or modifications to this document is at the sole risk and liability of the user. The user shall, to the fullest extent of the law, hold CRSG harmless from any claims, liabilities or damages including legal fees that may be incurred as a result of any unauthorized or improper use or modification of this document.

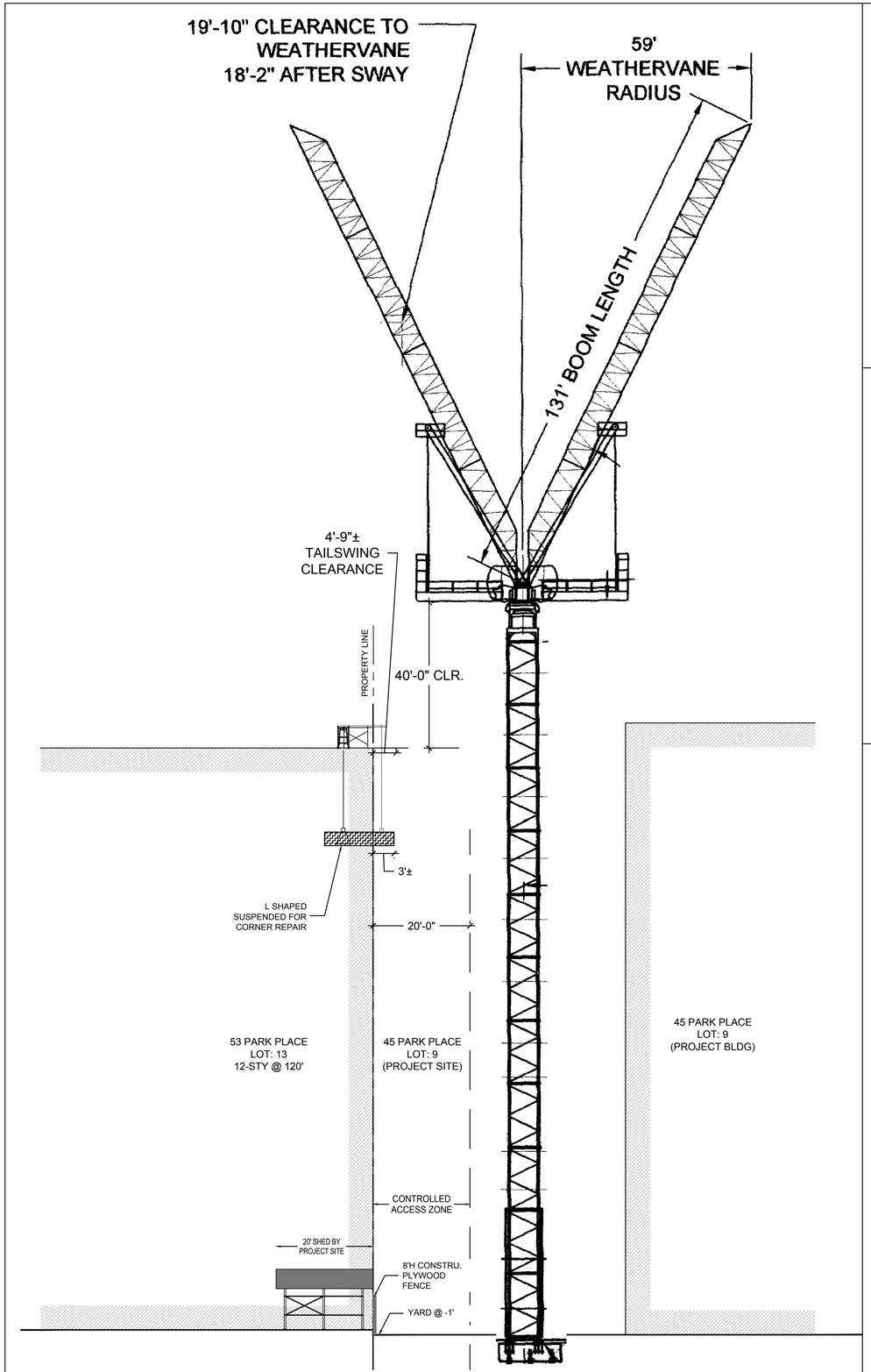

6.0 EXCLUSION ZONE SECTIONAL DETAILS

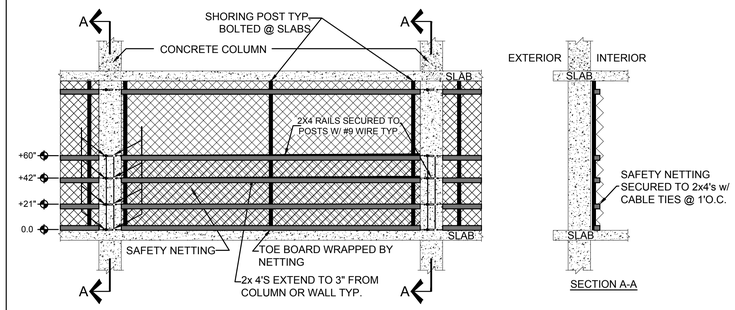

6.1 FULL HEIGHT ALTERNATE VERTICAL NETTING DETAIL SCALE: N.T.S.

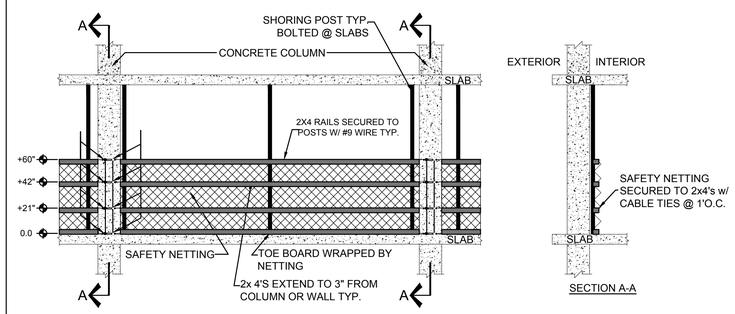

6.2 60" ALTERNATE VERTICAL NETTING DETAIL SCALE: N.T.S.

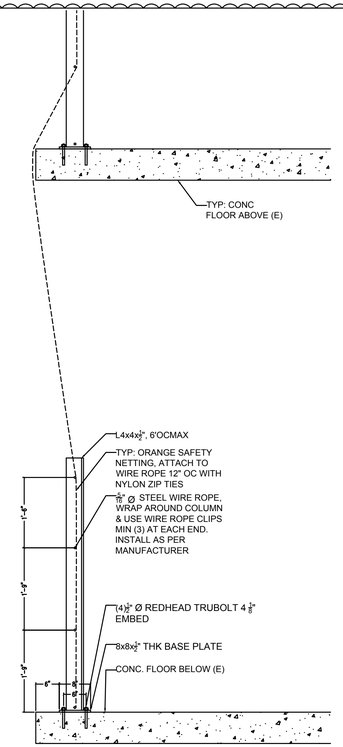

6.3 ALTERNATE FULL HEIGHT VERTICAL NETTING SUPPORTS DETAIL SCALE: N.T.S.

1

45 Park Place

Site Safety Plan

New 43 Story Residential Building

OWNER

PARK PLACE PARTNERS DEVELOPMENT
C/O SOHO PROPERTIES
31 WEST 27 STREET
MANHATTAN NY 10001
212-966-9600

ENGINEER / DESIGNER

CR SAFETY construction & realty safety group
226 East Merrick Road
Valley Stream, NY 11580
(516) 256-0317

CONSTRUCTION MANAGER

GILBANE RESIDENTIAL CONSTRUCTION, LLC
88 PINE STREET 27TH FLOOR
NEW YORK, NY 10005
212-312-1600

REVISIONS

#:	DATE:	REVISION:
	10/30/13	ORIGINAL DRAFT
	1/7/16	REVISED
	6/27/16	REVISED
	11/8/16	REVISED
	2/28/17	BEST REVISION
	9/14/17	BEST REVISION
	1/03/18	BEST REVISION
	4/26/18	BEST REVISION
	4/27/18	BEST REVISION
	5/02/18	BEST REVISION

LOCATION INFO

D.O.B. Address: 45 Park Place
New York, NY 10007
Block: 126
Lot: 9
Zoning District: C6-4
Map: 12B
BIN #: 1079148

North

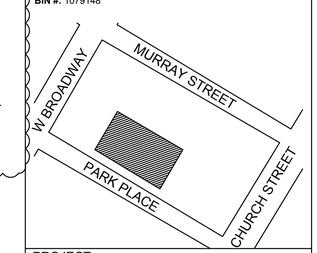

PROJECT

NEW 43 STORY RESIDENTIAL BLDG.
45 PARK PLACE
NEW YORK, NY 10007

NOTE

THESE DETAILS ARE SCHEMATIC. APPROVED DESIGN DRAWINGS WILL BE ON SITE-SIGNED AND SEALED BY REGISTERED DESIGN PROFESSIONAL. A QUALIFIED PERSON WILL PERIODICALLY INSPECT THE SITE TO ENSURE STABILITY. RECORDS OF INSPECTIONS AND MAINTENANCE WILL BE KEPT ON SITE AND MADE AVAILABLE TO THE DEPARTMENT OF BUILDINGS UPON REQUEST.

REVISIONS

1 DETAIL ADDED

DRAWING NAME

TYPICAL SAFETY DETAILS D

SEAL

John Young, RA
APPROVED
AMENDED PLAN
07/06/2018
BEST SSP

DATE:	JULY 05,2018
REVIEWED BY:	WA
DRAWN BY:	CJL/JH/ML/MN
SCALE:	AS NOTED
DWG NUMBER:	SSP-005.02
CRSG FILE NO:	45 Park Pl - SITE SAFETY - Draft 10-30-13.dwg

© CRSG 2014
It is a violation of the law to alter this document in hard copy or electronic format (the "document") in any way. Use or modifications to this document is at the sole risk and liability of the user. The user shall, to the fullest extent of the law, hold CRSG harmless from any claims, liabilities or damages including legal fees that may be incurred as a result of any unauthorized or improper use or modification of this document.